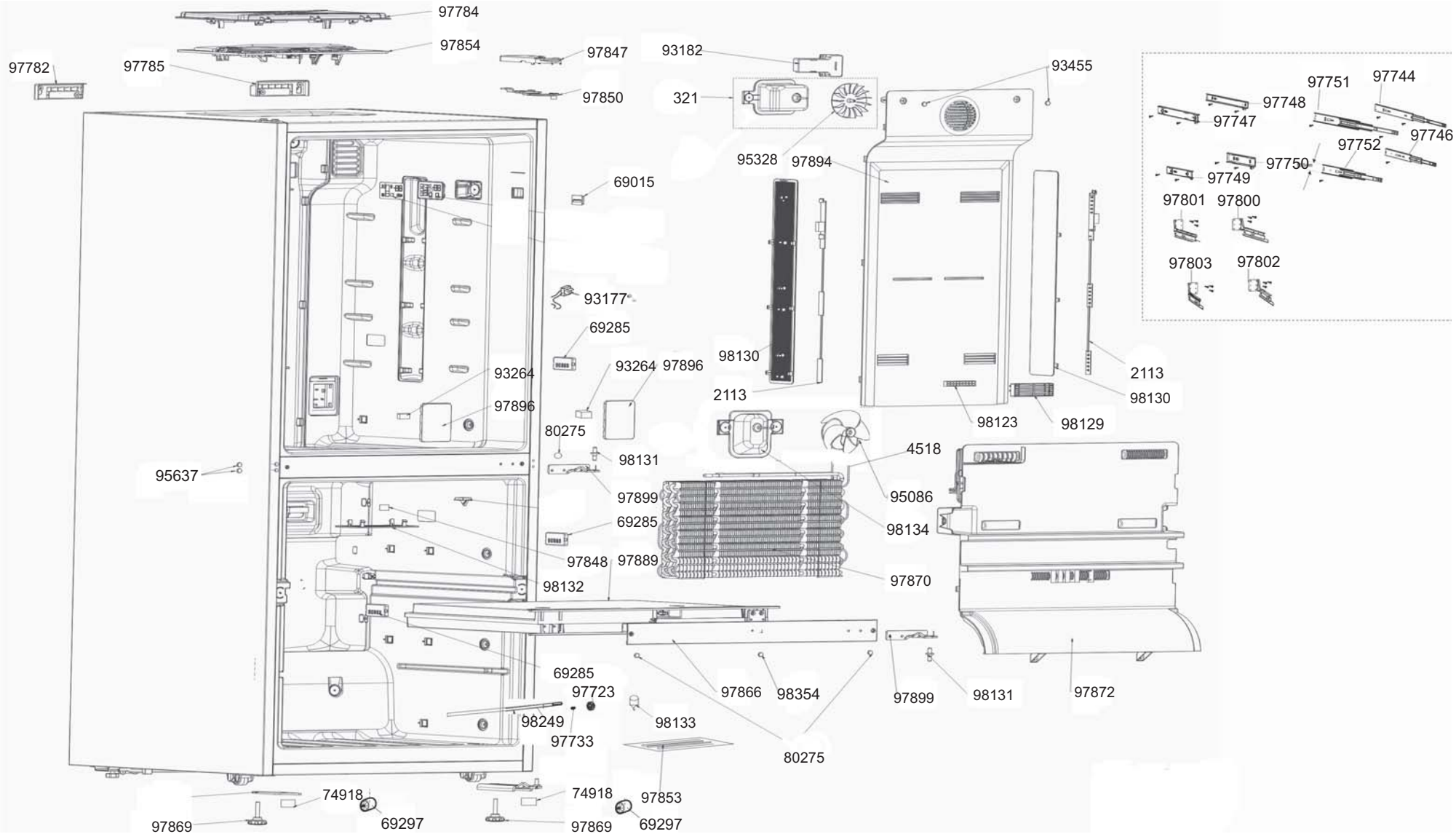
97784
97854
97782
97785
97847
97850
93182
321
93455
95328
97894
69015
93177
69285
93264
97896
93264
97896
98130
2113
2113
98130
98123
98129
80275
98131
95637
97899
69285
97848
97889
98132
4518
95086
98134
97870
69285
97723
98249
97733
98133
97866
98354
97899
98131
97872
80275
74918
97869
69297
74918
97869
97853
69297
97751
97744
97748
97747
97746
97752
97750
97749
97801
97800
97803
97802

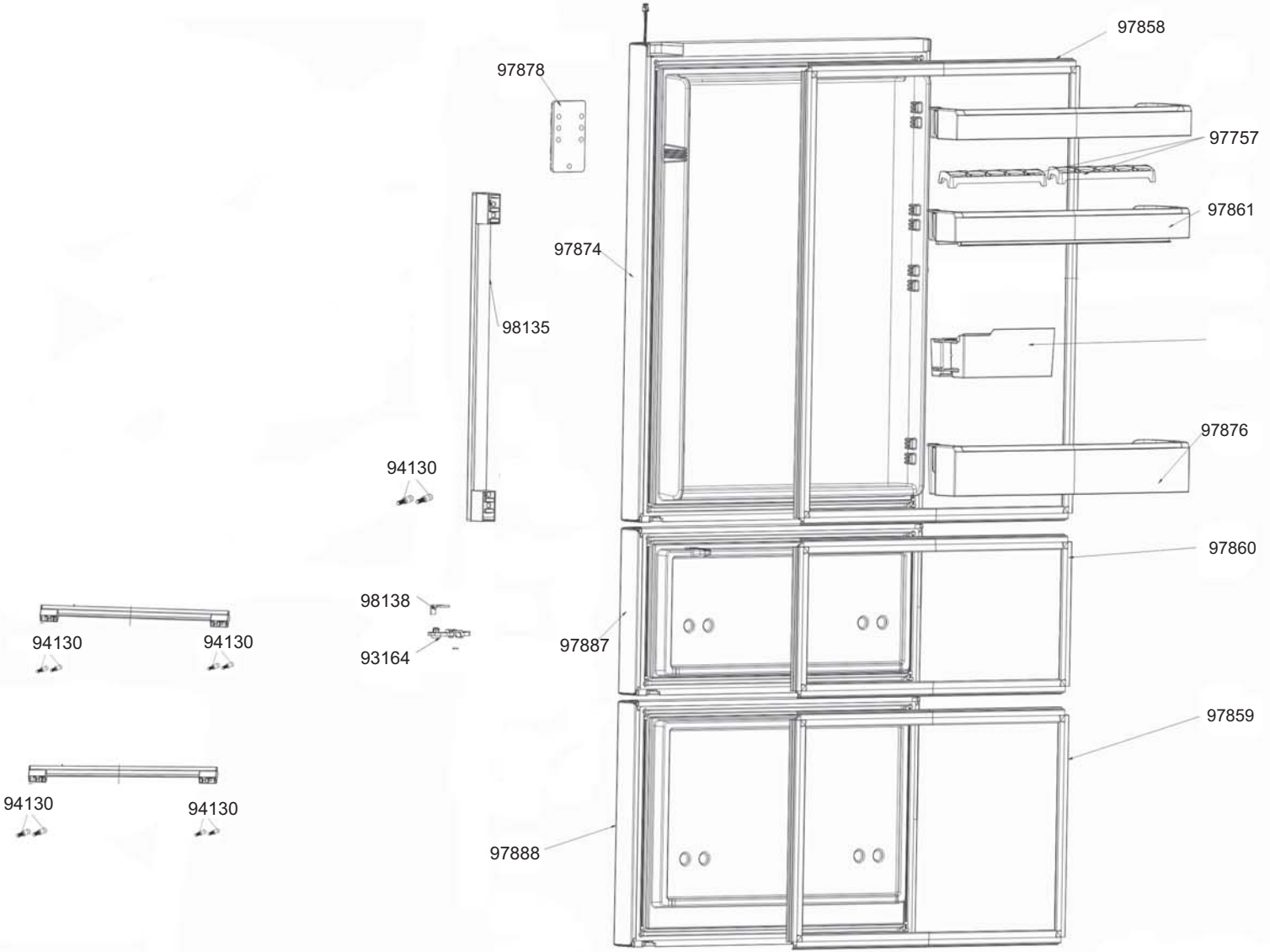
97858
97878
97757
97861
97874
98135
97876
94130
97860
98138
94130
94130
97887
93164
97859
94130
94130
97888

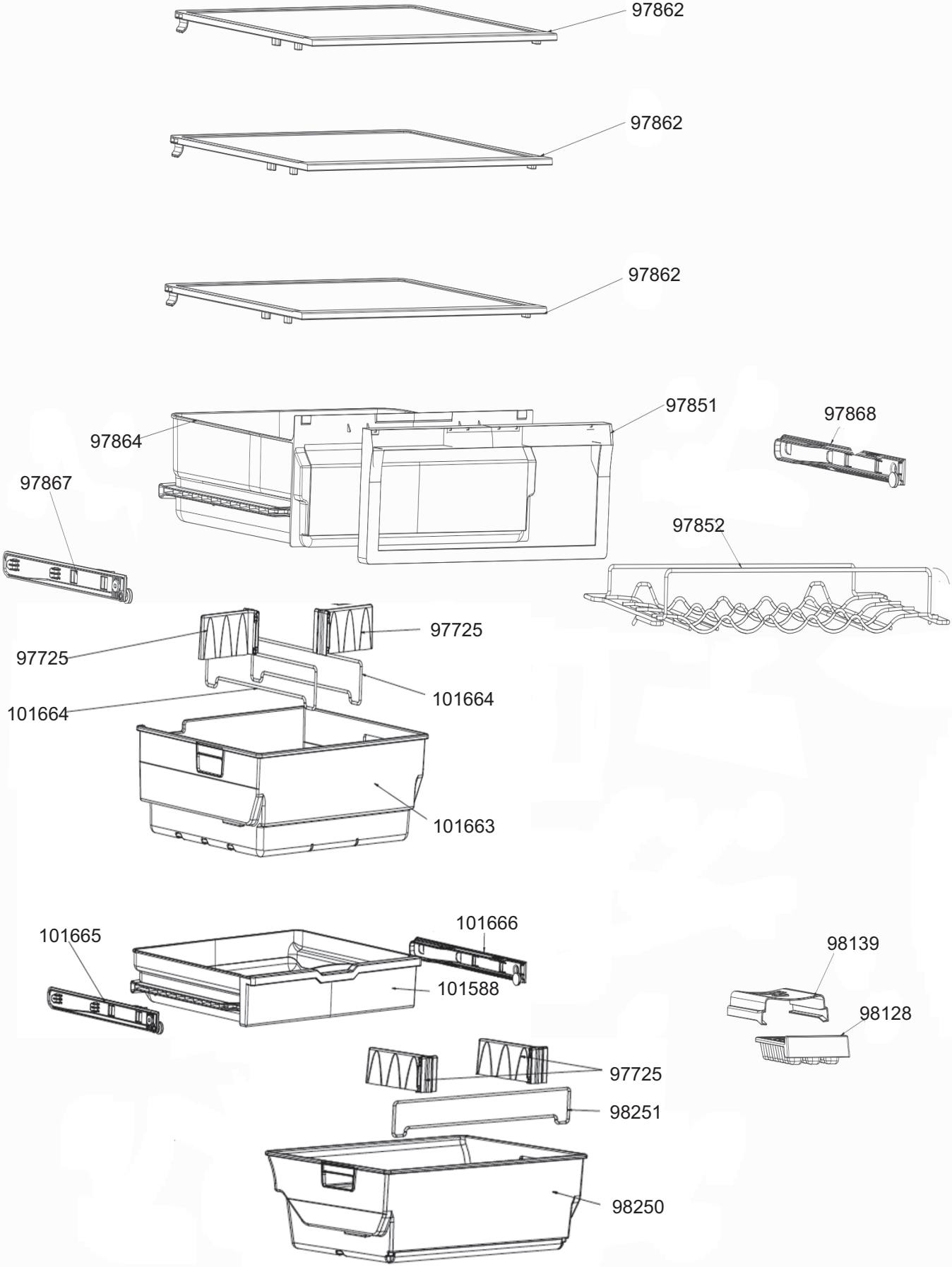
97862
97862
97862
97851
97868
97864
97867
97852
97725
97725
101664
101664
101663
101665
101666
98139
101588
98128
97725
98251
98250

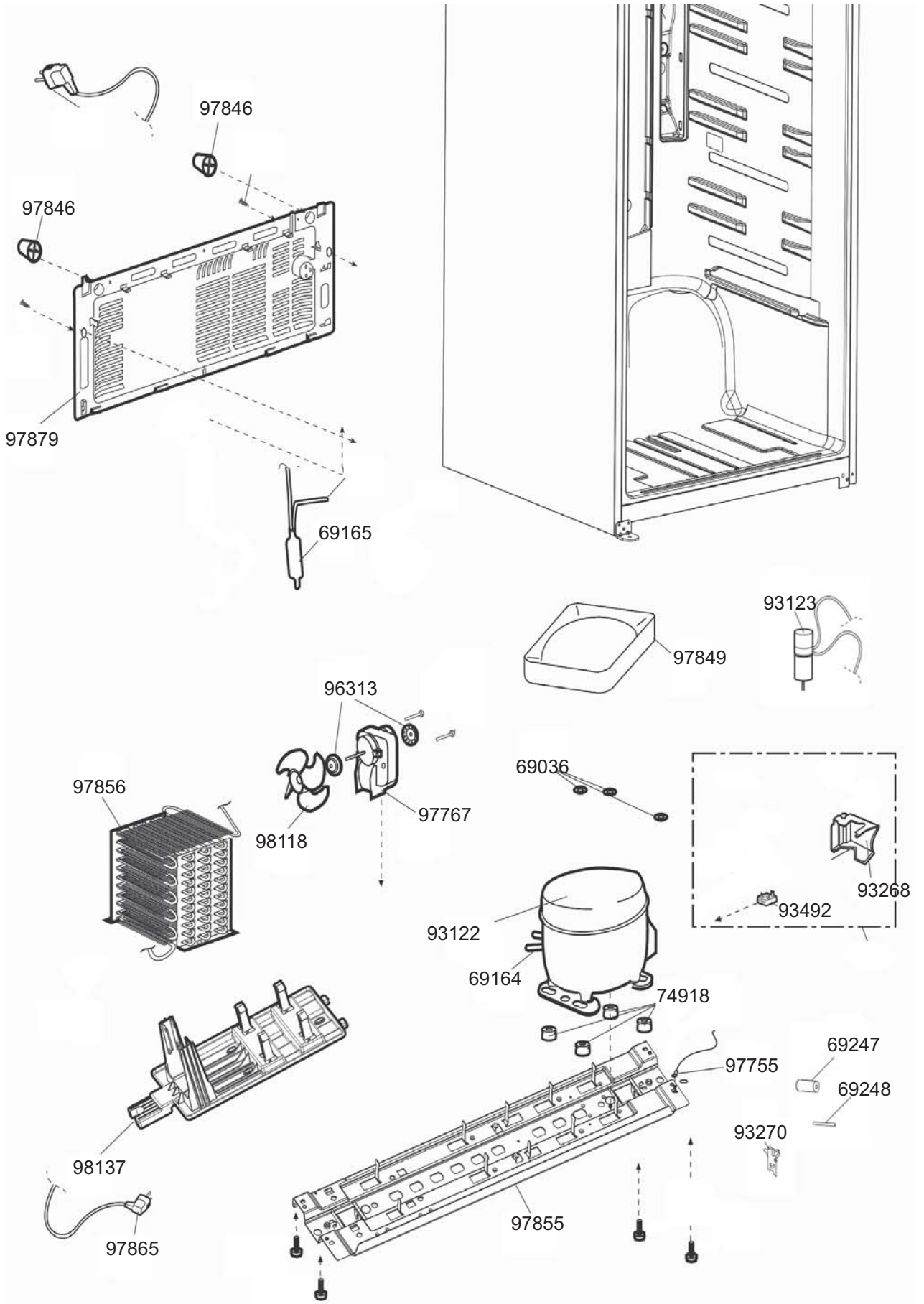
97846
97846
97879
69165
97849
93123
96313
97856
98118
97767
69036
93268
93492
93122
69164
74918
69247
97755
69248
93270
98137
97865
97855